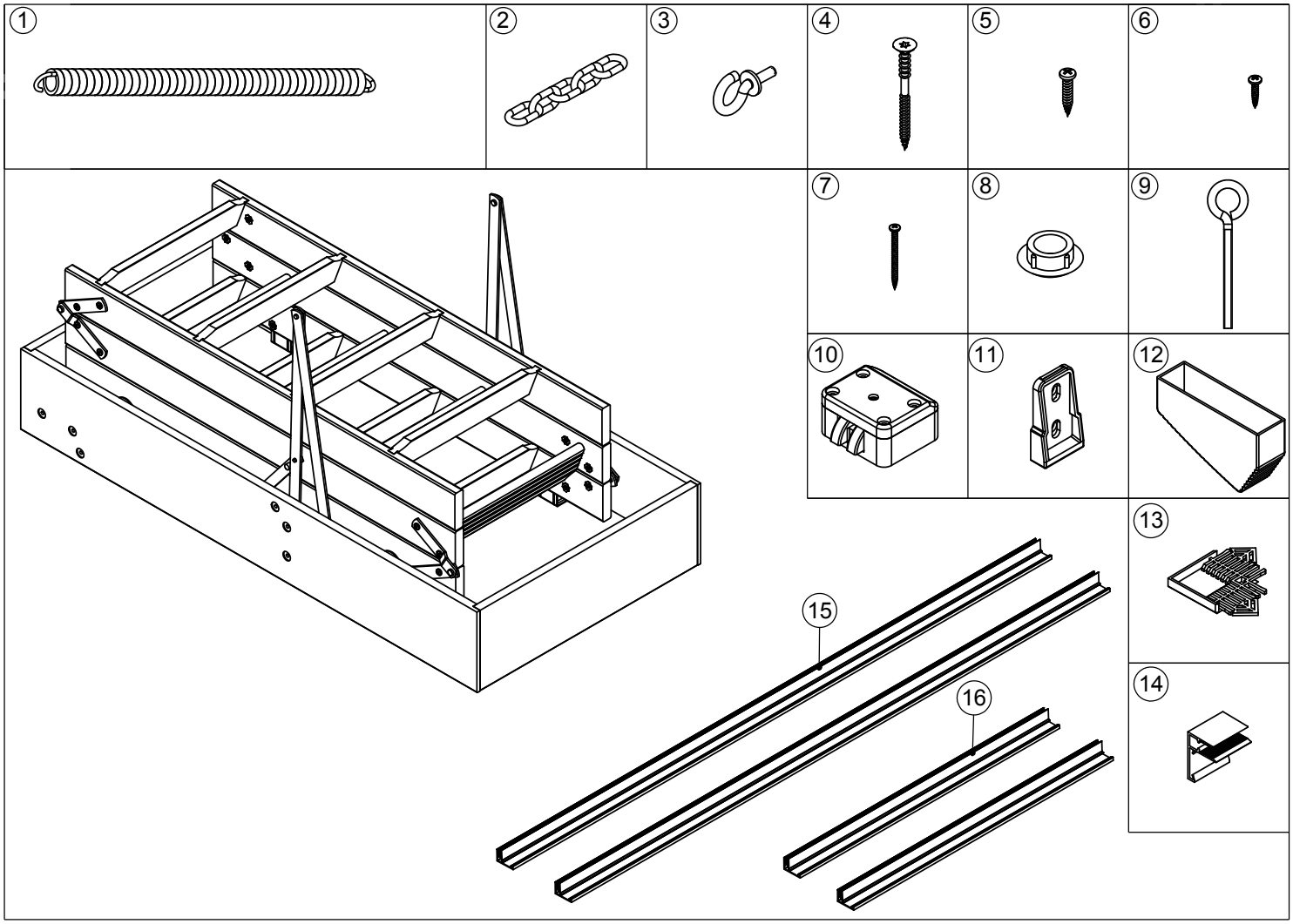
1
2
3
4
5
6
7
8
9
10
11
12
13
14
15
16

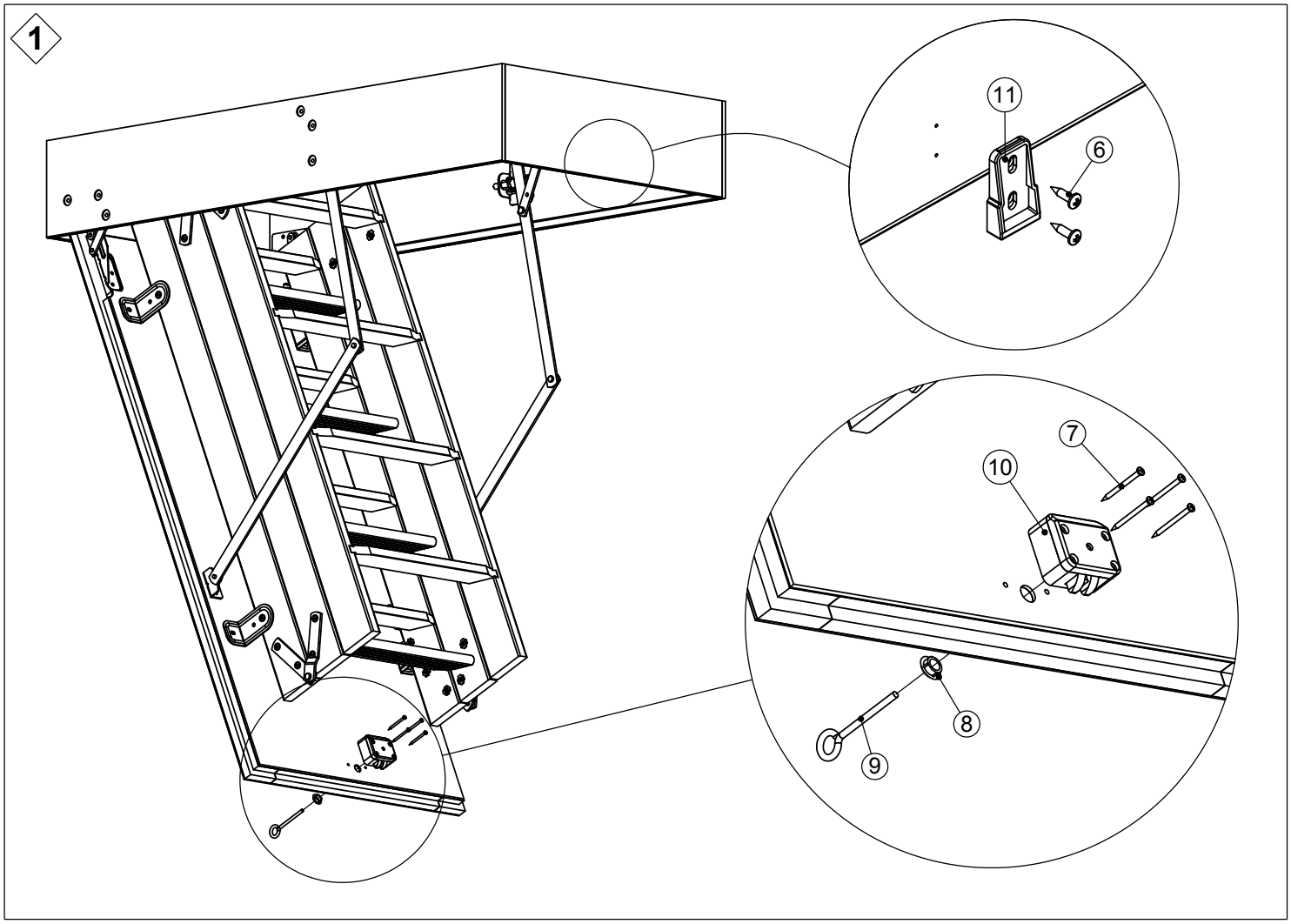
1
11
6
7
10
8
9

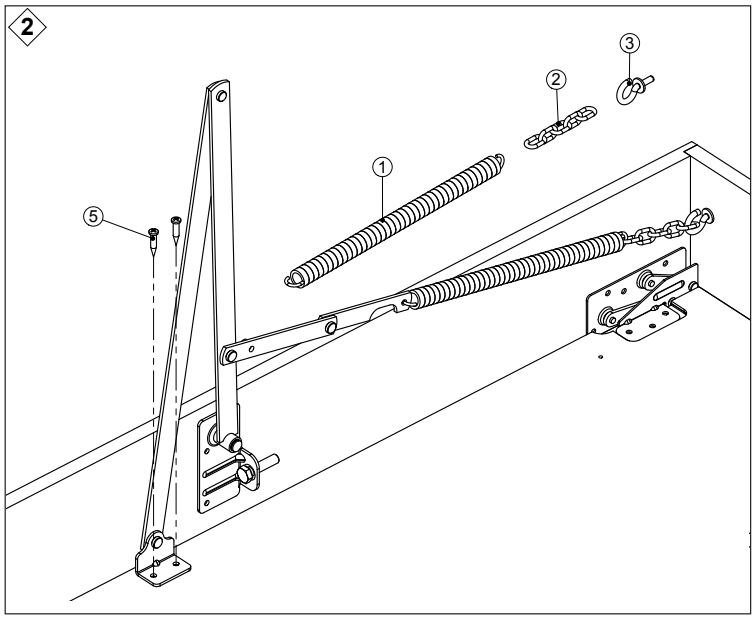
2
1
2
3
5

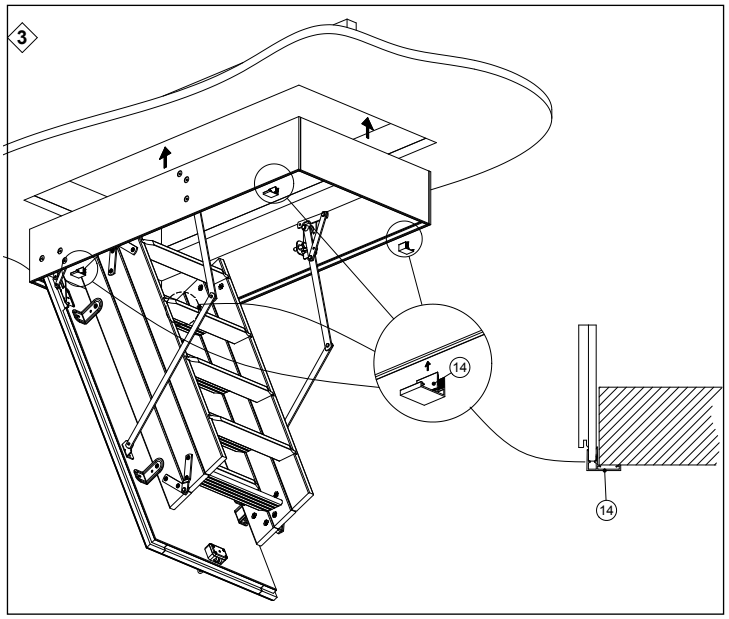
3
14
14

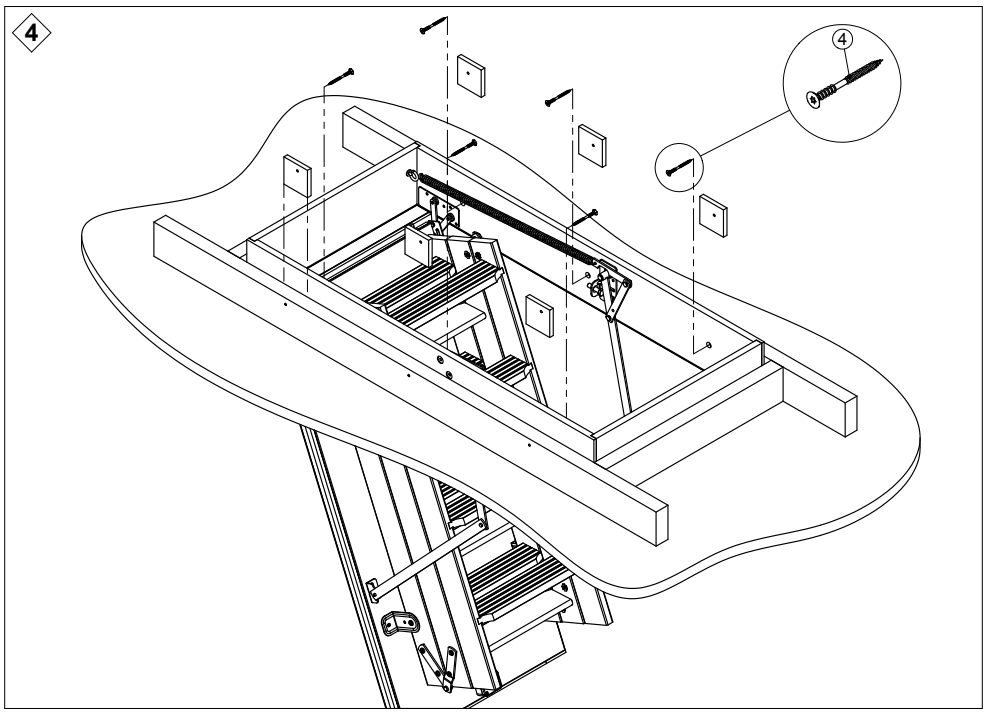
4
4

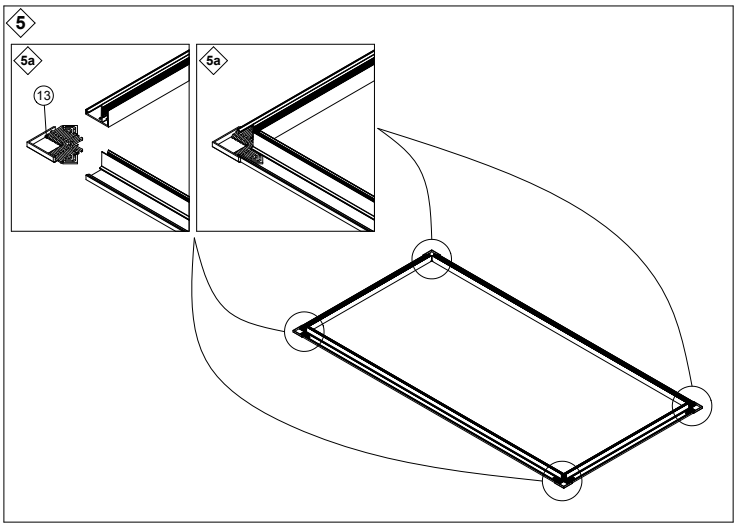
5
5a
13
5a

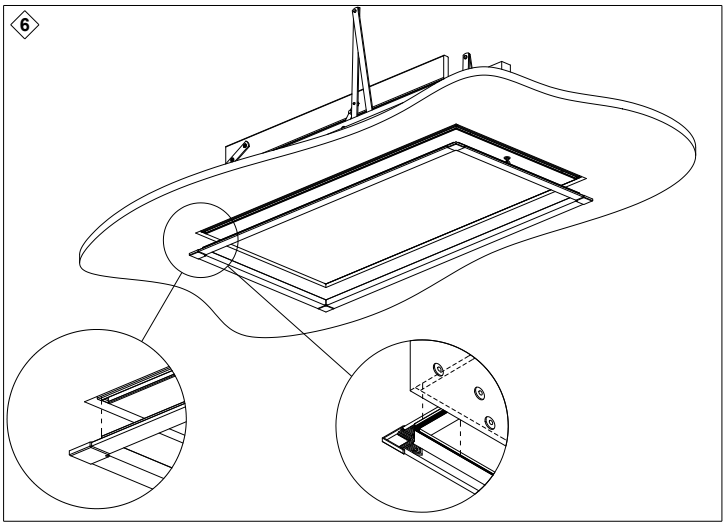
6

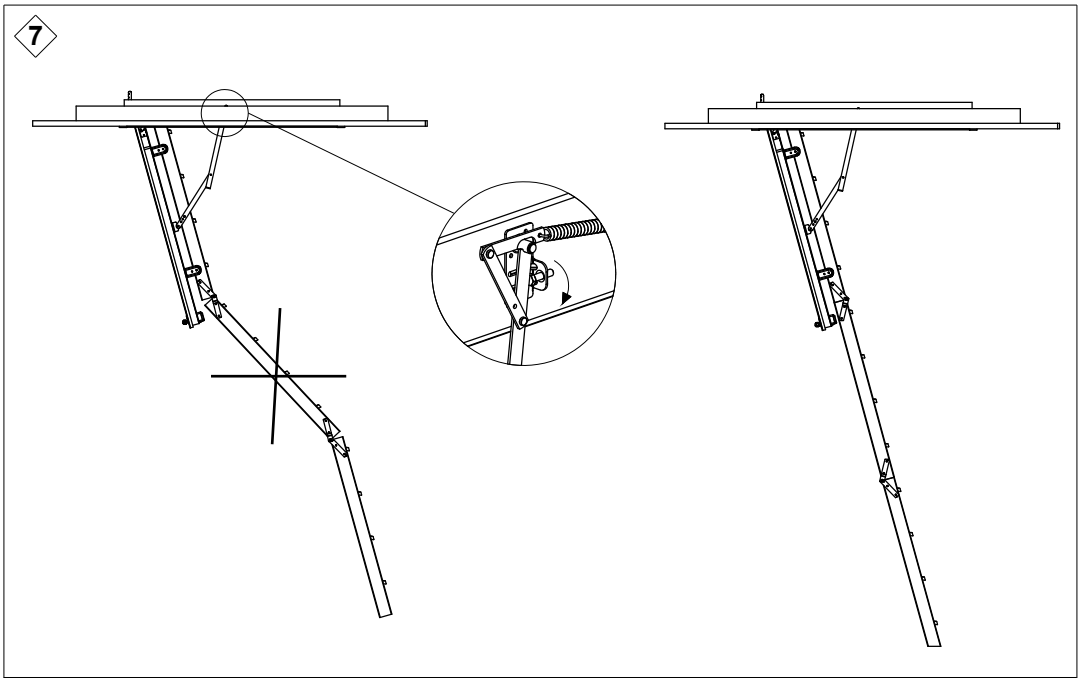
7

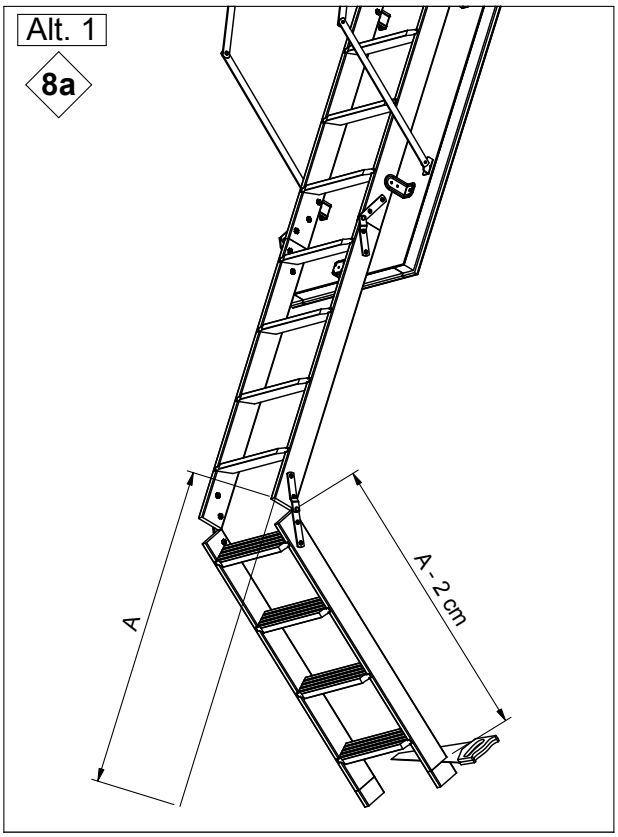
Alt. 1
8a
A
A - 2 cm

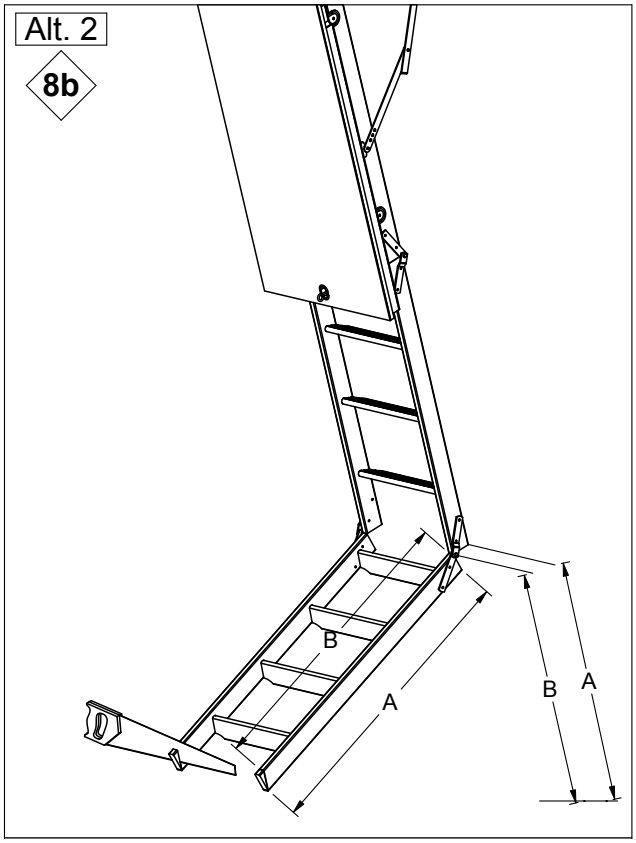
Alt. 2
8b
B
A
B
A

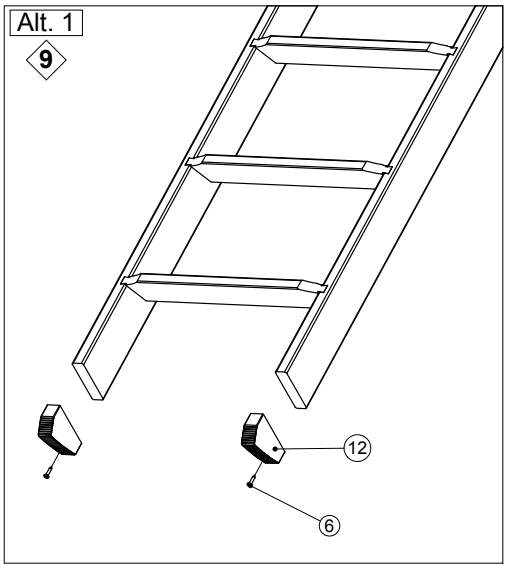
Alt. 1
9
12
6

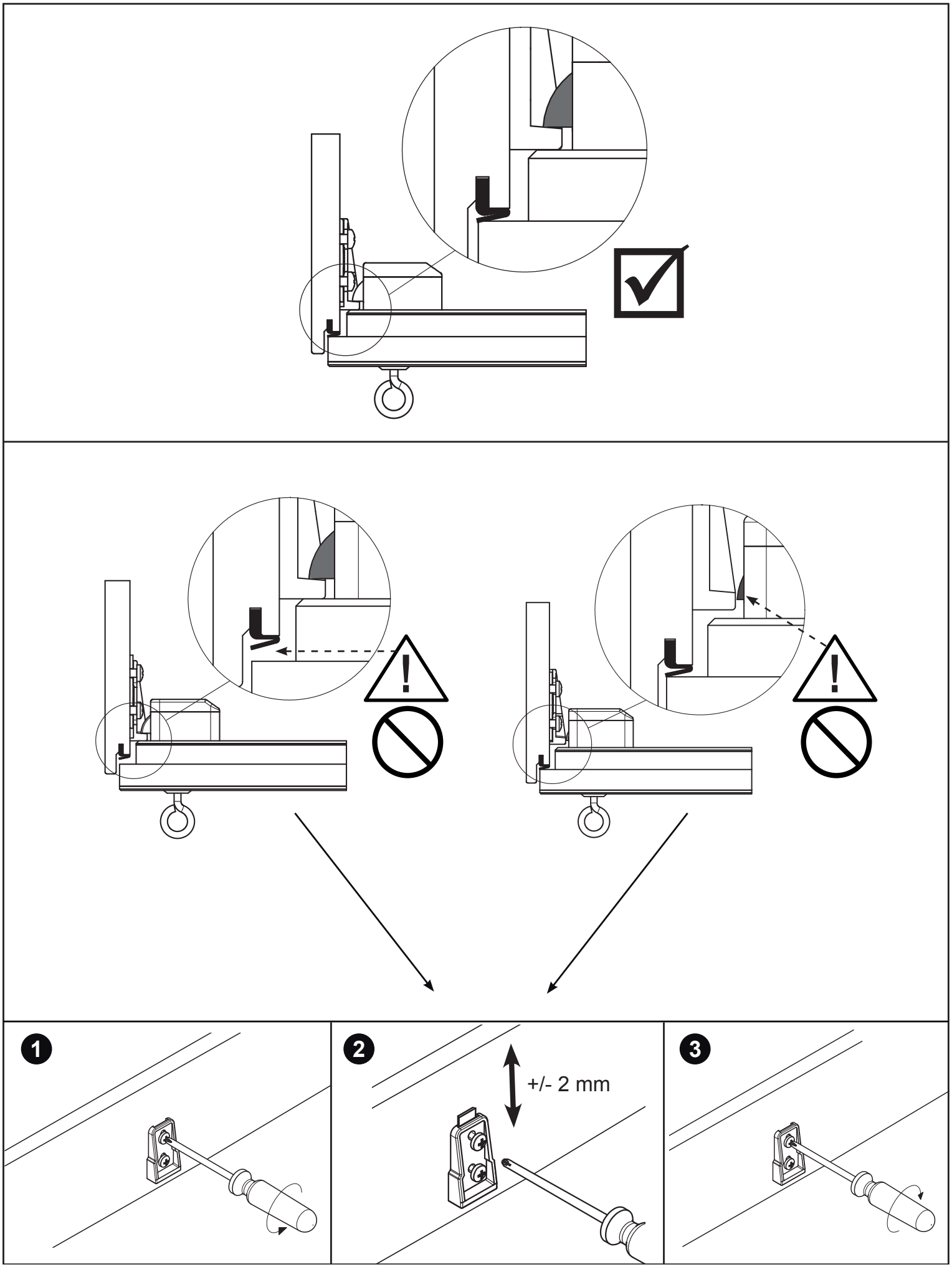
1
2
+/- 2 mm
3